SPECIFICATION FOR APPROVAL

承　认　书

CUSTOMER	NUMBER
客户名称：	编　　号：
DESCRIPTION	QUANTITY
品　　名：贴片共模滤波器	数　　量：
PART NO.	DATE
型　　号：BCDCM4520-2-151T40	日　　期：
CUSTOMER PART NO.	NOTE
客户料号：	注　　解：

APPROVAL SIGNATURE 客户承认签章

APPROVED BY 核　准	Q.C.DEPT. 品　管	CHECKED BY 核　查	DRAWN BY 制　作

深圳市宝创达电子有限公司

SHENZHEN BAOCHUANGDA ELECTRONICS CO.,LTD.

地址：深圳市宝安区石岩街道罗租社区黄蜂岭工业大道江峡科技园F栋201

Add：Room 201, Building F, Jiangxia Science and Technology Park, Huangfengling Industrial Avenue, Luozhu Community, Shiyan Street, Bao'an District, Shenzhen City

Tel：0755-29736760　　Fax：0755-28056434

Http:// www.bcdcn.com

BCDCM4520-2-151T40

DC COMMON MODE FILTER

FEATURES

- A chip-type common mode filter for large current applications. Common mode impedance surpasses 90Ω at 100MHz. Noise is greatly suppressed.
- Capable of handling the highest current(up to 4A) of any chip-type common mode filter.
- Height and size have been considered ,resulting in a compact and light-weight choke coil.Applicable for the miniaturization required to reduce the size and weight of portable equipment.
- The products contain no lead and also support lead-free soldering.
- The product does not contain regulatde substances that are slated to be included in ROHS.



APPLICATIONS

Used for power line noise suppression for any electonic-devices
Used to counter adapter/battery line noise for relatively large electronic devices such as notebook PCs,stand-alone word processors,etc

TEMPERATURE RANGES

Operating	—40to+125℃
Storage(After mount)	—40to+125℃

Part Number System

BCDCM 4520 -2 -151 T40

① ② ③ ④ ⑤

① Type:BCDCM
② External Dimensions(W×A)(mm):4.5*2.0
③ Number of Lines: 2
④ Impedance:151=150Ω
⑤ Packing:Tape & Reel

ELECTRICAL CHARACTERISTICS

Part No.	Impedance[at 100MHz]		DC resistance	Rated current	Insulation resistance
	(Ω)min	(Ω)typ	(mΩ)max[1 line]	Idc(A)max	(MΩ)min
BCDCM4520-2-151T40	90	150	12	4.0	10

BCDCM4520-2-151T40

DC COMMON MODE FILTER

TYPICAL ELECTRICAL CHARACTERISTICS

IMPEDANCE vs. FREQUENCY CHARACTERISTICS

BCDCM4520-2-151T40

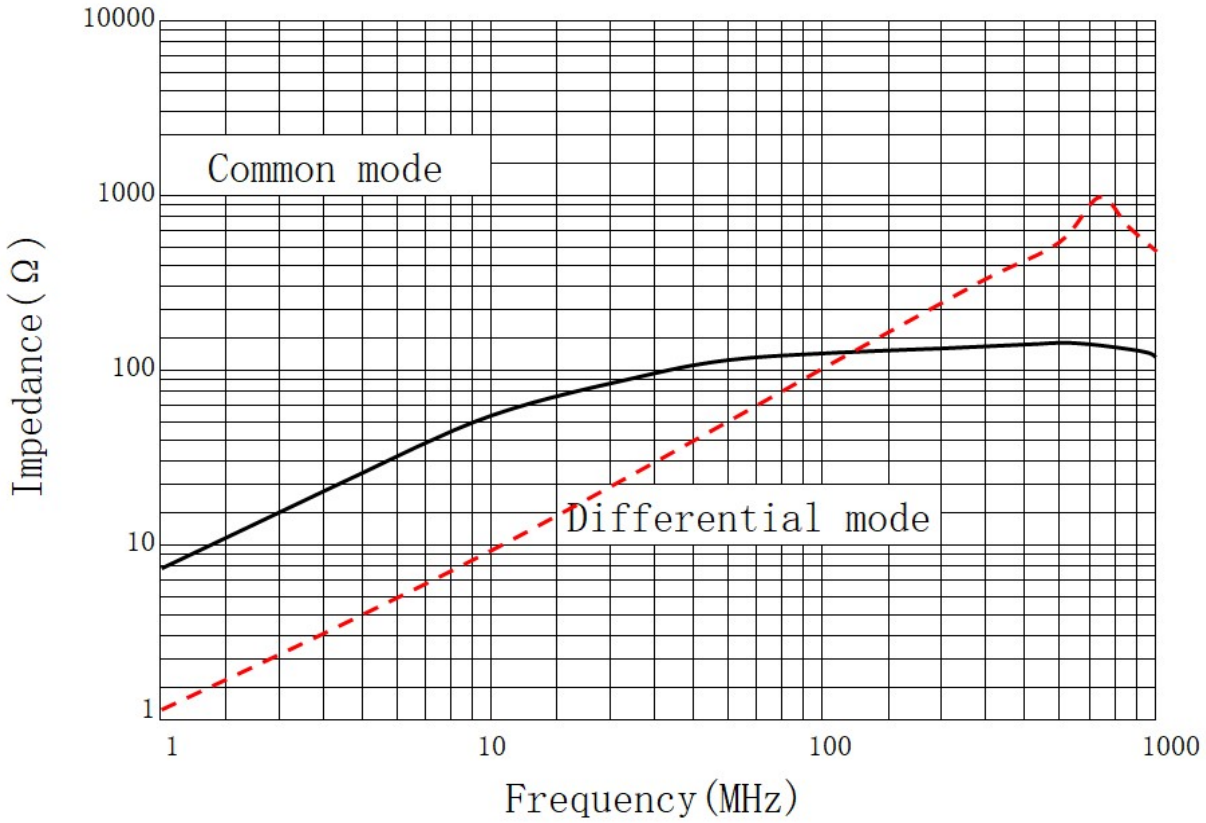

BCDCM4520-2-151T40

DC COMMON MODE FILTER

SHAPES AND DIMENSIONS/CIRCUIT DIAGRAM/RECOMMENDED PC BOARD PATTERN(REFLOW SOLDERING)

◆ Dimensions(mm)

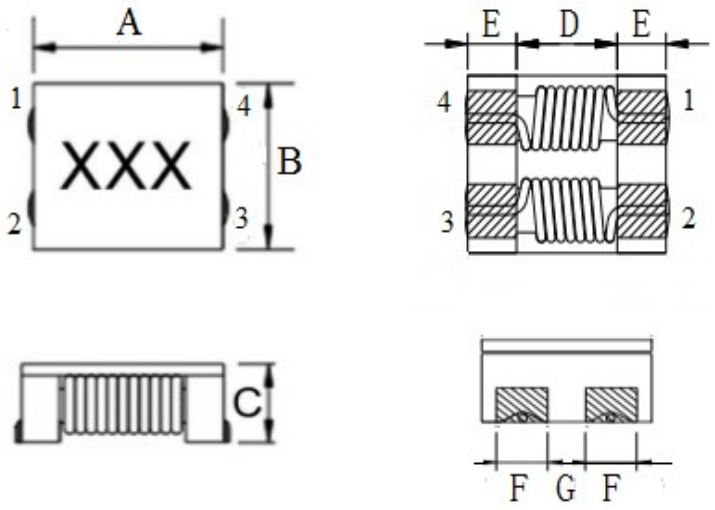

UNIT: mm

A:4.7 ± 0.5

B:4.5 ± 0.5

C:2.4（MAX）

D:2.7　E:1.0

F:1.15　G:0.85

◆ Land Pattern(mm)

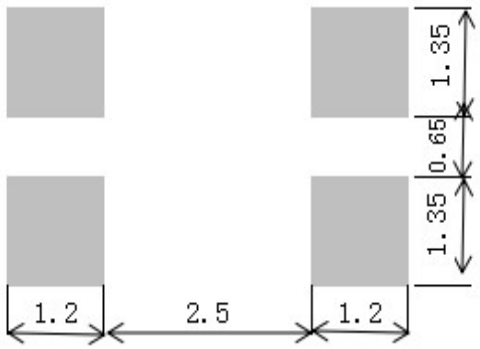

◆Schematics(Bottom)

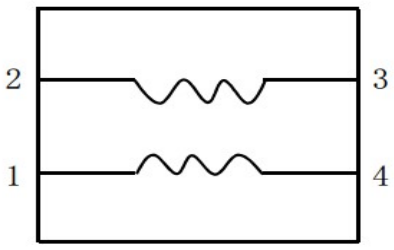

No polarity

Recommended Reflow Temperature Curve

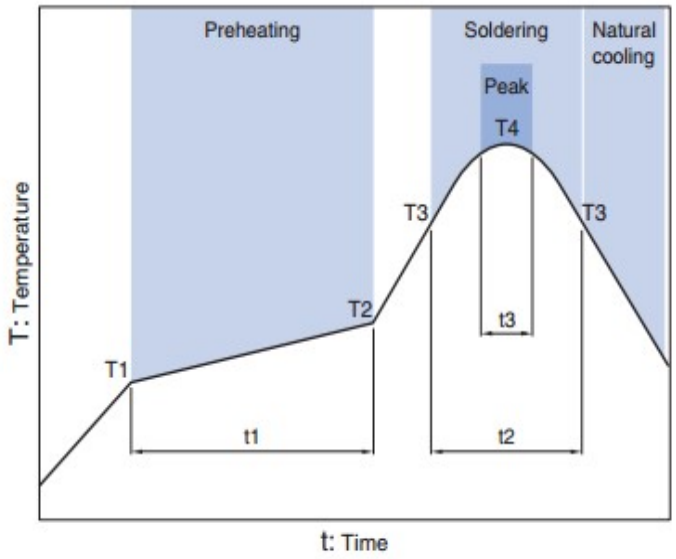

Preheating			Soldering		Peak	
Temp.		Time	Temp.	Time	Temp.	Time
T1	T2	t1	T3	t2	T4	t3
150°C	180°C	60 to 120s	230°C	10 to 30s	245°C	5s

Package
size (mm)

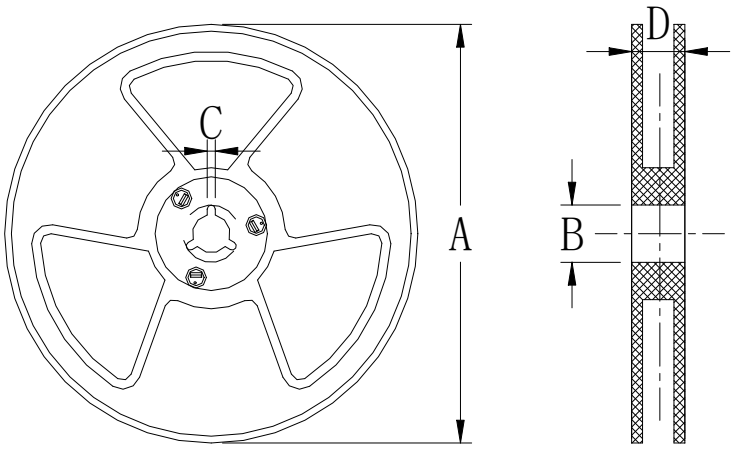

Specs / size	7"
A	Φ178±2.0
B	Φ58
C	4.8
D	14.5