# SPECIFICATION FOR APPROVAL

# 承　认　书

| | |
|---|---|
| CUSTOMER | NUMBER |
| 客户名称： | 编　　号： |
| DESCRIPTION | QUANTITY |
| 品　　名：贴片共模滤波器 | 数　　量： |
| PART NO. | DATE |
| 型　　号：BCDCM7060-2-501TC | 日　　期： |
| CUSTOMER PART NO. | NOTE |
| 客户料号： | 注　　解： |

| APPROVAL SIGNATURE<br>客户承认签章 |
|---|
| |

| APPROVED BY<br>核　准 | Q.C.DEPT.<br>品　管 | CHECKED BY<br>核　查 | DRAWN BY<br>制　作 |
|---|---|---|---|
| | | | |


## 深圳市宝创达电子有限公司

SHENZHEN BAOCHUANGDA ELECTRONICS CO.,LTD.

地址：深圳市龙华区观澜街道横坑河西村77号A栋2楼

Add：2nd floor building A no.77 hexi village guanlan Street longhua district shenzhen

Tel：0755-29736760　　Fax：0755-28056434

Http:// www.bcdcn.com

# BCDCM7060-2-501TC

# DC COMMON MODE FILTER

## FEATURES

- A chip-type common mode filter for large current applications. Common mode impedance surpasses 350Ω at 100MHz. Noise is greatly suppressed.
- Capable of handling the highest current(up to 5A) of any chip-type common mode filter.
- Height and size have been considered ,resulting in a compact and light-weight choke coil.Applicable for the miniaturization required to reduce the size and weight of portable equipment.
- The products contain no lead and also support lead-free soldering.
- The product does not contain regulatde substances that are slated to be included in ROHS.



## APPLICATIONS

Used for power line noise suppression for any electonic-devices
Used to counter adapter/battery line noise for relatively large electronic devices such as notebook PCs,stand-alone word processors,etc

## TEMPERATURE RANGES

| | |
|---|---|
| Operating | —40to+125℃ |
| Storage(After mount) | —40to+125℃ |

## Part Number System

| BCDCM | 7060 | -2 | -501 | T | C |
|---|---|---|---|---|---|
| ① | ② | ③ | ④ | ⑤ | ⑥ |

① Type:BCDCM
② External Dimensions(L×W)(mm):7.0*6.0
③ Number of Lines: 2
④ Impedance:501=500Ω
⑤ Packing:Tape & Reel
⑥ Management Symbol:C

## ELECTRICAL CHARACTERISTICS

| Part No. | Impedance (Ω)[at 100MHz] | | DC resistance | Rated current | Insulation resistance |
|---|---|---|---|---|---|
| | min | typ | (mΩ)max[1 line] | Idc(A)max | (MΩ)min |
| BCDCM7060-2-501TC | 350 | 500 | 12 | 5 | 10 |

# BCDCM7060-2-501TC

# DC COMMON MODE FILTER

## TYPICAL ELECTRICAL CHARACTERISTICS

## IMPEDANCE vs. FREQUENCY CHARACTERISTICS

BCDCM7060-2-501TC

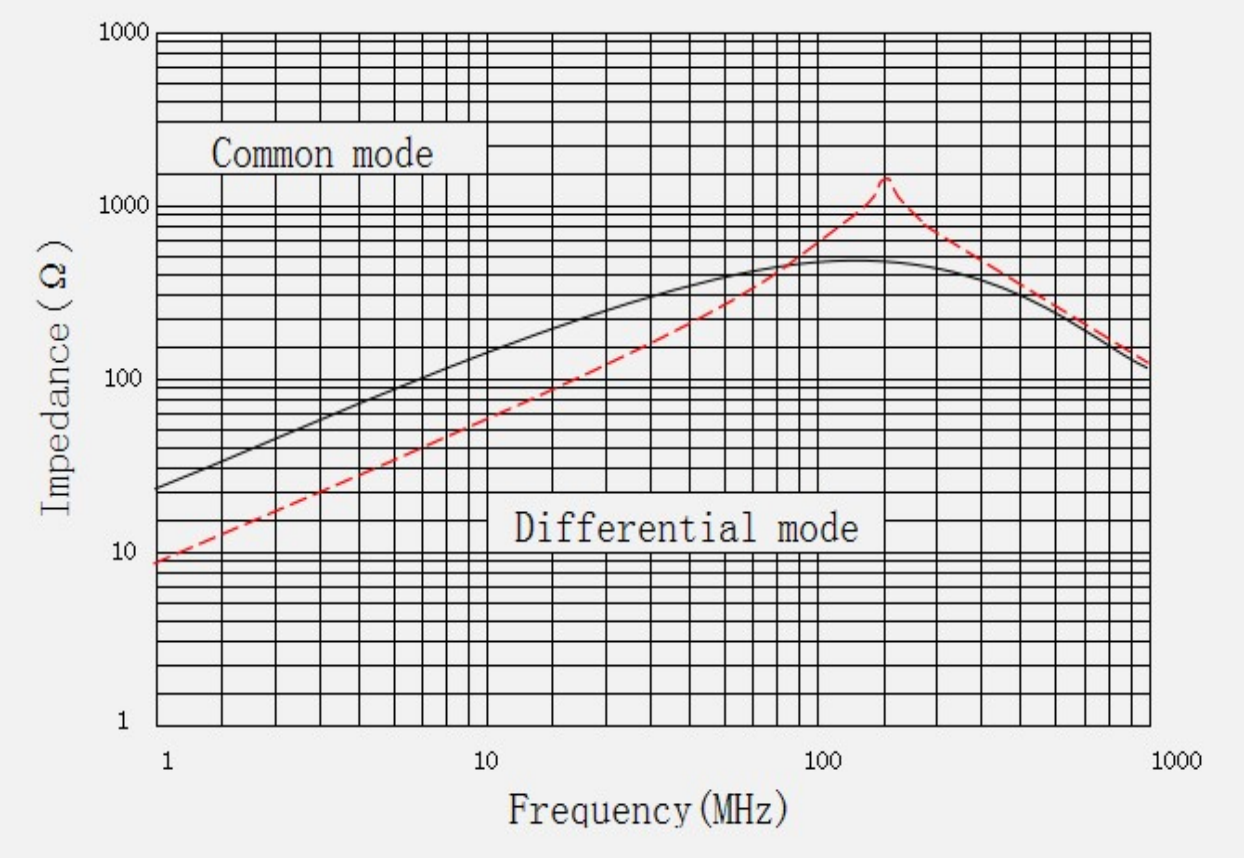

# BCDCM7060-2-501TC

# DC COMMON MODE FILTER

## SHAPES AND DIMENSIONS/CIRCUIT DIAGRAM/RECOMMENDED PC BOARD PATTERN(REFLOW SOLDERING)

◆ Dimensions(mm)

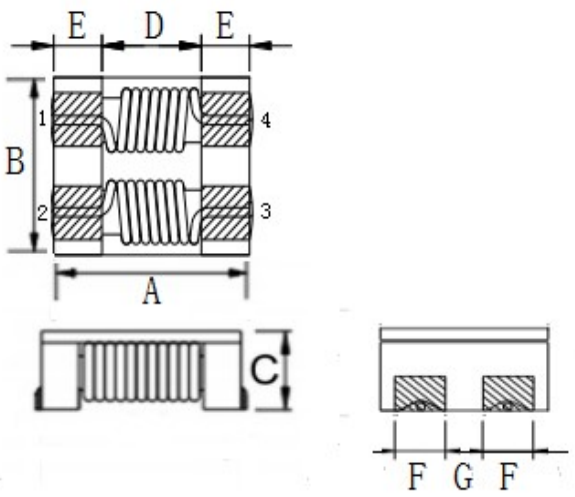


UNIT: mm

A:7.0 ± 0.3

B:6.0 ± 0.3

C:3.3（MAX）

D:3.5　E:1.7

F:1.5　G:1.5

◆ Land Pattern(mm)

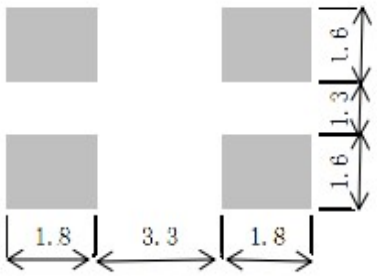


◆Schematics(Bottom)

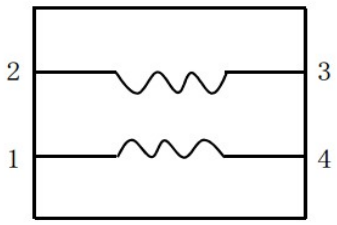


No polarity

## Recommended Reflow Temperature Curve

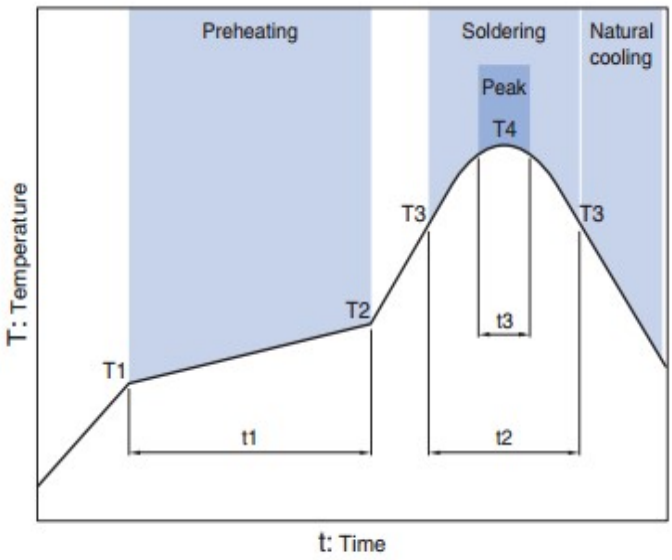


| Preheating | | | Soldering | | Peak | |
|---|---|---|---|---|---|---|
| Temp. | | Time | Temp. | Time | Temp. | Time |
| T1 | T2 | t1 | T3 | t2 | T4 | t3 |
| 150°C | 180°C | 60 to 120s | 230°C | 10 to 30s | 245°C | 5s |

Package
size (mm)

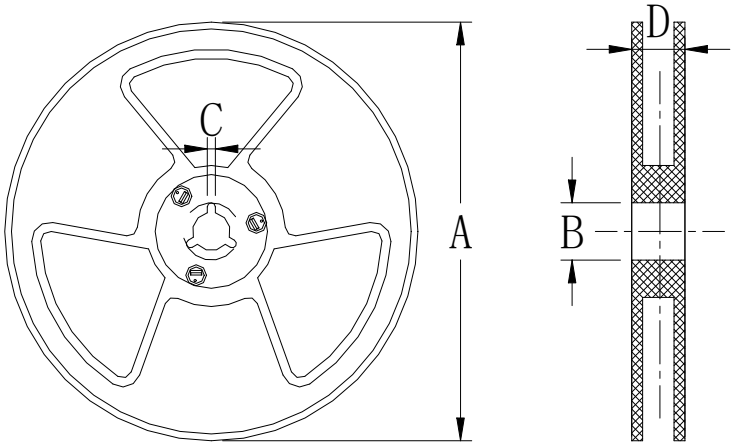


| Specs / size | 13" | 7" |
|---|---|---|
| A | Φ330±2.0 | Φ178±2.0 |
| B | Φ90 ± 2.0 | |
| C | 2.3 | |
| D | 21.5 | |