SPECIFICATION FOR APPROVAL

承　认　书

CUSTOMER 客户名称：	NUMBER 编　　号：
DESCRIPTION 品　　名：贴片共模滤波器	QUANTITY 数　　量：
PART NO. 型　　号：BCDCM9070-2-272TC	DATE 日　　期：
CUSTOMER PART NO. 客户料号：	NOTE 注　　解：

APPROVAL SIGNATURE 客户承认签章

APPROVED BY 核　准	Q.C.DEPT. 品　管	CHECKED BY 核　查	DRAWN BY 制　作

深圳市宝创达电子有限公司

SHENZHEN BAOCHUANGDA ELECTRONICS CO.,LTD.

地址：深圳市龙华区观澜街道横坑河西村77号A栋2楼

Add：2nd floor building A no.77 hexi village guanlan Street longhua district shenzhen

Tel：0755-29736760　　Fax：0755-28056434

Http:// www.bcdcn.com

BCDCM9070-2-272TC

DC COMMON MODE FILTER

FEATURES

- A chip-type common mode filter for large current applications. Common mode impedance surpasses 2000Ω at 100MHz. Noise is greatly suppressed.
- Capable of handling the highest current(up to 2.0A) of any chip-type common mode filter.
- Height and size have been considered ,resulting in a compact and light-weight choke coil.Applicable for the miniaturization required to reduce the size and weight of portable equipment.
- The products contain no lead and also support lead-free soldering.
- The product does not contain regulatde substances that are slated to be included in ROHS.



APPLICATIONS

Used for power line noise suppression for any electonic-devices
Used to counter adapter/battery line noise for relatively large electronic devices such as notebook PCs,stand-alone word processors,etc

TEMPERATURE RANGES

Operating	—40to+125℃
Storage(After mount)	—40to+125℃

Part Number System

BCDCM	9070	-2	-272	T	C
①	②	③	④	⑤	⑥

① Type:BCDCM
② External Dimensions(L×W)(mm):9.0*7.0
③ Number of Lines: 2
④ Impedance:272=2700Ω
⑤ Packing:Tape & Reel
⑥ Management Symbol:C

ELECTRICAL CHARACTERISTICS

Part No.	Impedance[at 100MHz](Ω)		DC resistance (mΩ)max[1 line]	Rated current Idc(A)max	Insulation resistance (MΩ)min
	min	typ			
BCDCM9070-2-272TC	2000	2700	86	2	10

TYPICAL ELECTRICAL CHARACTERISTICS

IMPEDANCE vs. FREQUENCY CHARACTERISTICS

BCDCM9070-2-272TC

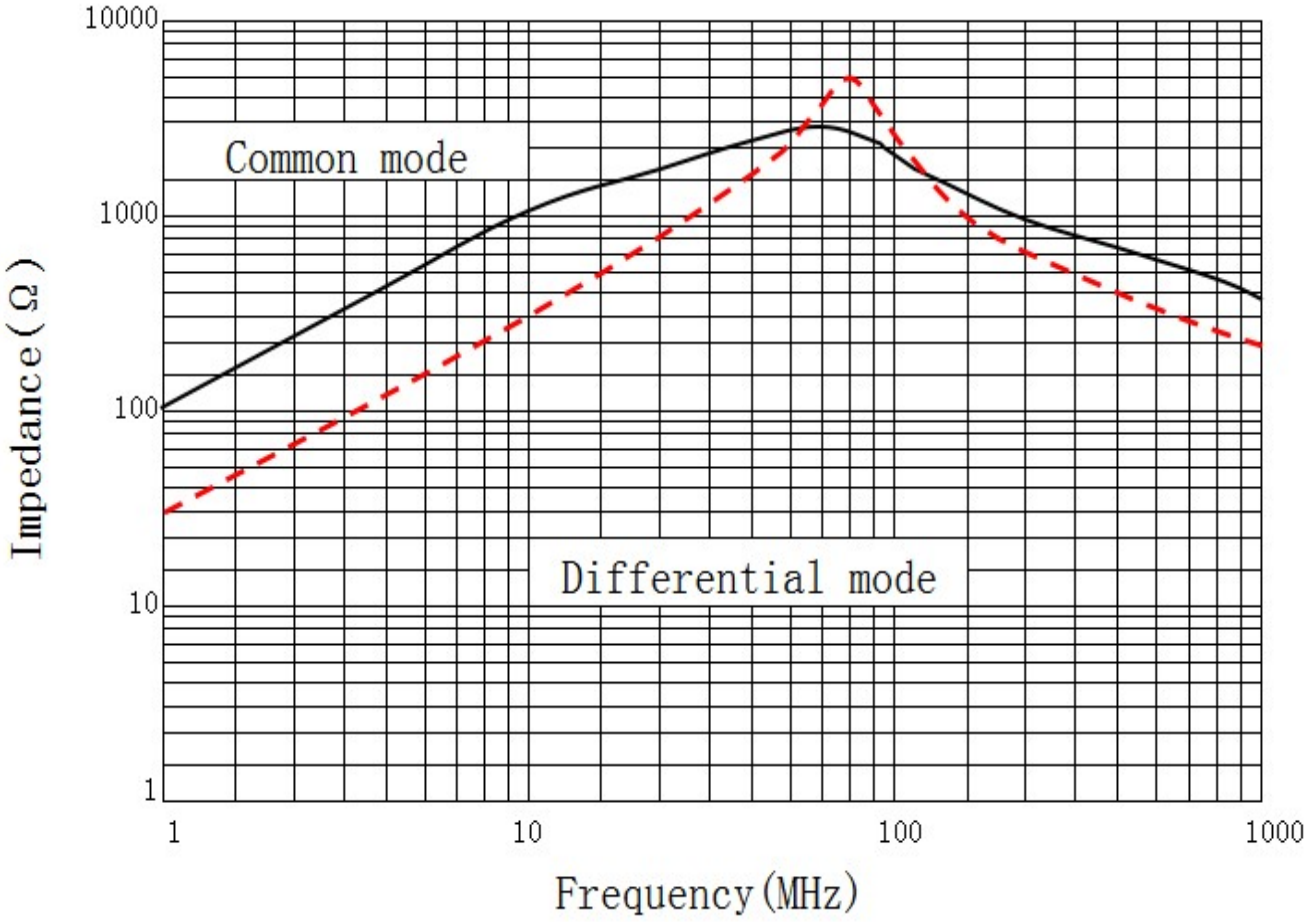

SHAPES AND DIMENSIONS/CIRCUIT DIAGRAM/RECOMMENDED PC BOARD PATTERN(REFLOW SOLDERING)

◆ Dimensions(mm)

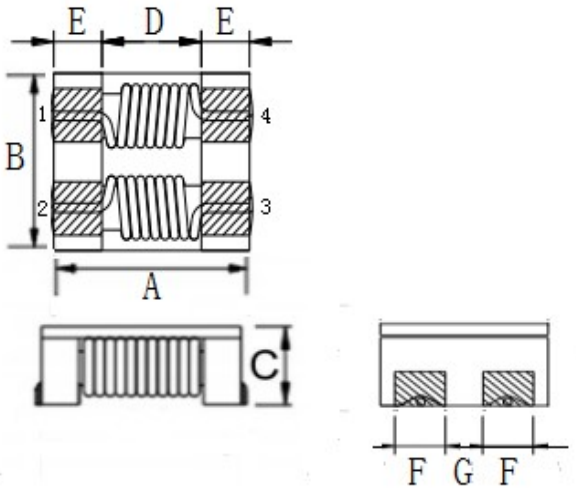

UNIT: mm

A:9.0 ± 0.5

B:7.0 ± 0.5

C:4.4（MAX）

D:5.6　E:1.7

F:1.8　G:2.0

◆ Land Pattern(mm)

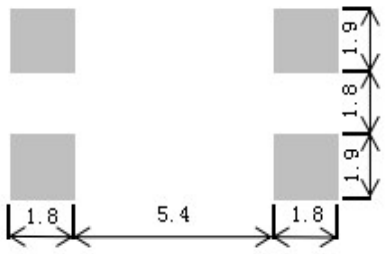

◆Schematics(Bottom)

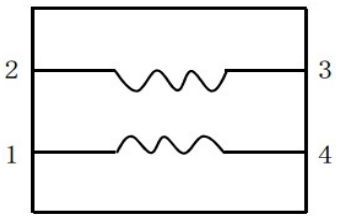

No polarity

BCDCM9070-2-272TC

DC COMMON MODE FILTER

Recommended Reflow Temperature Curve

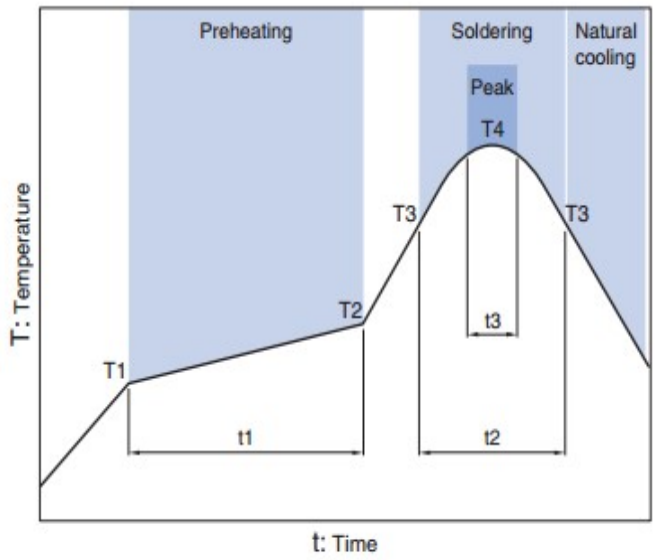

Preheating			Soldering		Peak	
Temp.		Time	Temp.	Time	Temp.	Time
T1	T2	t1	T3	t2	T4	t3
150°C	180°C	60 to 120s	230°C	10 to 30s	245°C	5s

Package
size (mm)

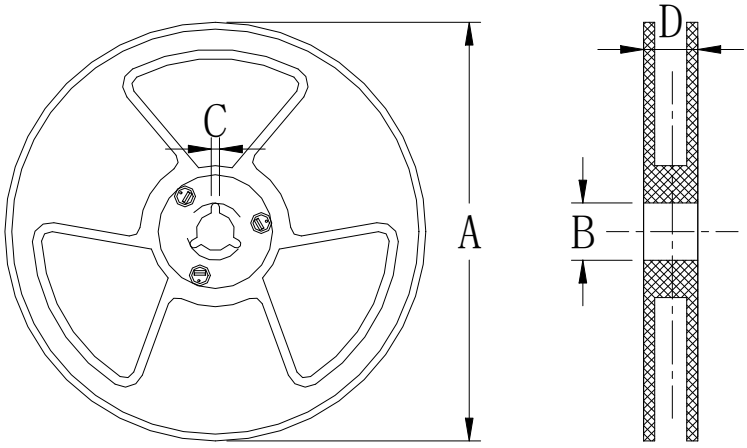

Specs / size	13"	7"
A	Φ330±2.0	Φ178±2.0
B	Φ90 ± 2.0	
C	2.3	
D	21.5	